-
-
-
-

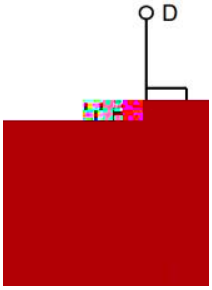
D

-
-
-

θ				
θ				

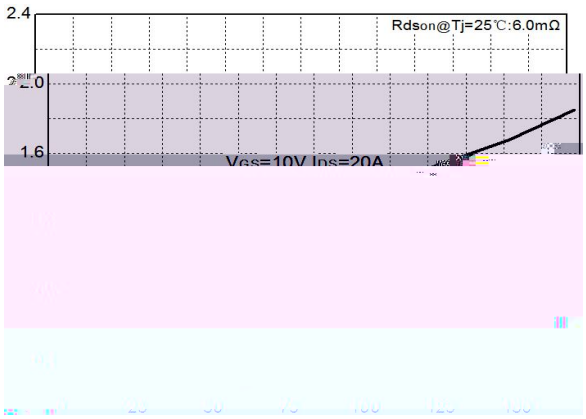
Rdson@Tj=25℃:6.0mΩ
2.4
2.0
1.6
Vgs=10V Ids=20A

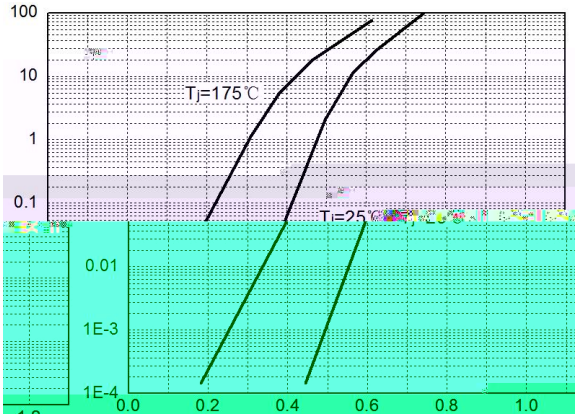
100
10
1
0.1
0.01
1E-3
1E-4
Tj=175℃
Tj=25℃
0.0
0.2
0.4
0.6
0.8
1.0

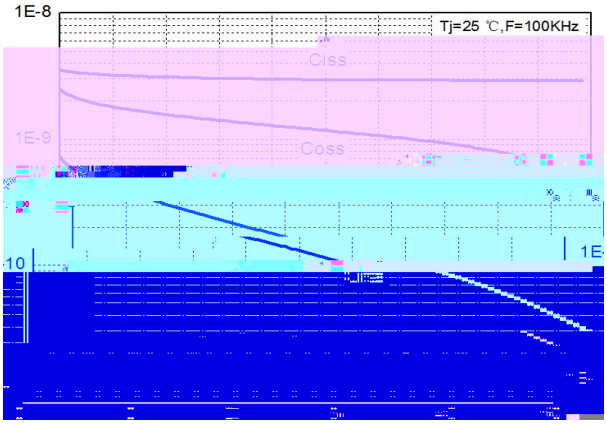
1E-8
1E-9
Tj=25 ℃,F=100KHz
Ciss
Coss

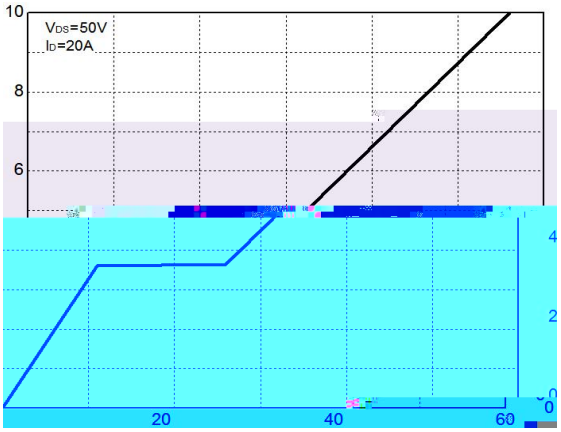
10
8
6
VDS=50V
ID=20A
20
40
60

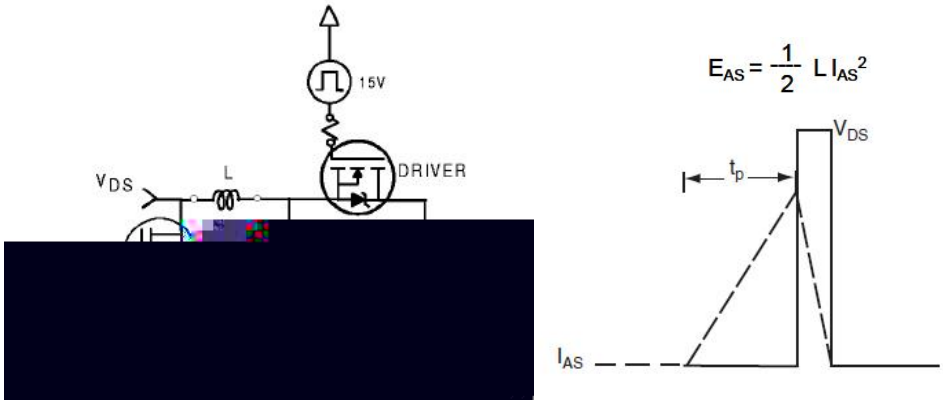
15V
DRIVER
VDS
L
EAS = 1/2 L IAS2
VDS
tp
IAS

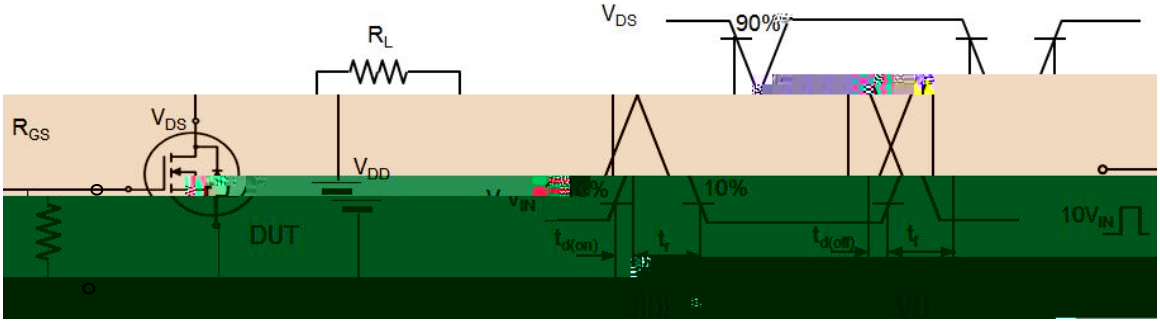
VDS
90%
RL
RGS
VDS
VDD
DUT
10%
10VIN
td(on)
tr
td(off)
tf

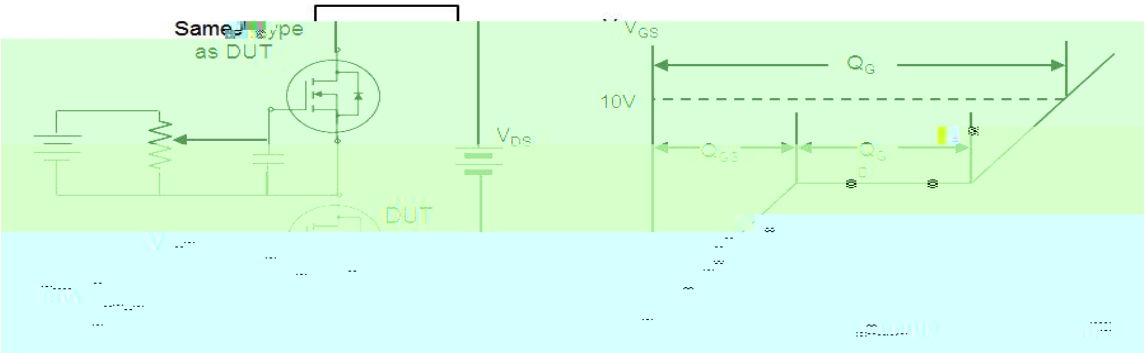
Same type
as DUT
VDS
DUT
VGS
QG
10V
QGS
QGD

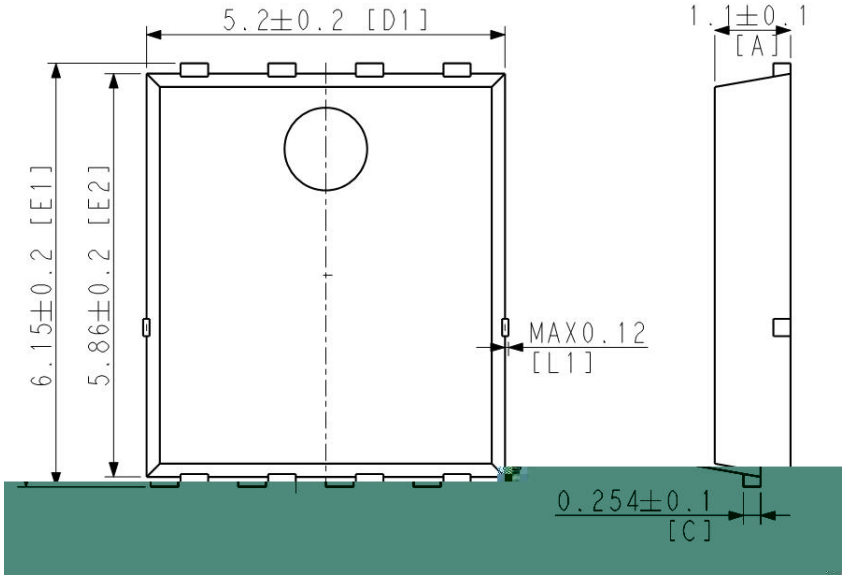
5.2±0.2 [D1]
1.1±0.1
[A]
6.15±0.2 [E1]
5.86±0.2 [E2]
MAX0.12
[L1]
0.254±0.1
[C]

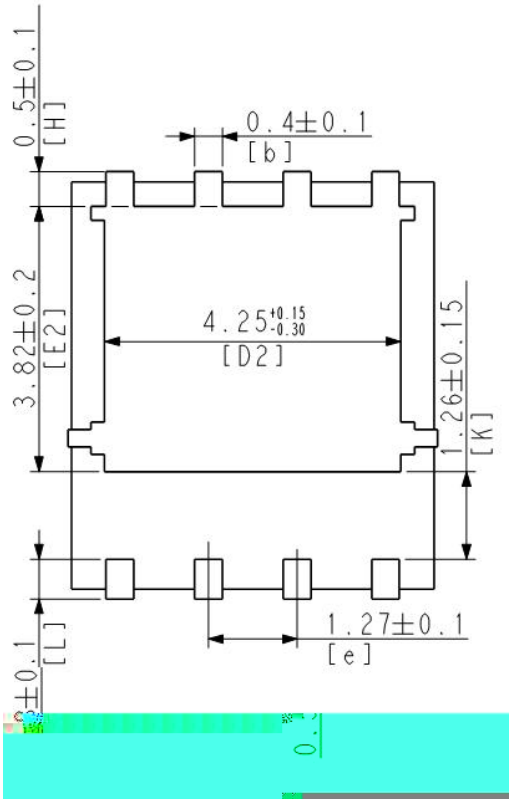
0.5±0.1
[H]
0.4±0.1
[b]
3.82±0.2
[E2]
4.25+0.15 -0.30
[D2]
1.26±0.15
[K]
1.27±0.1
[e]
[L]

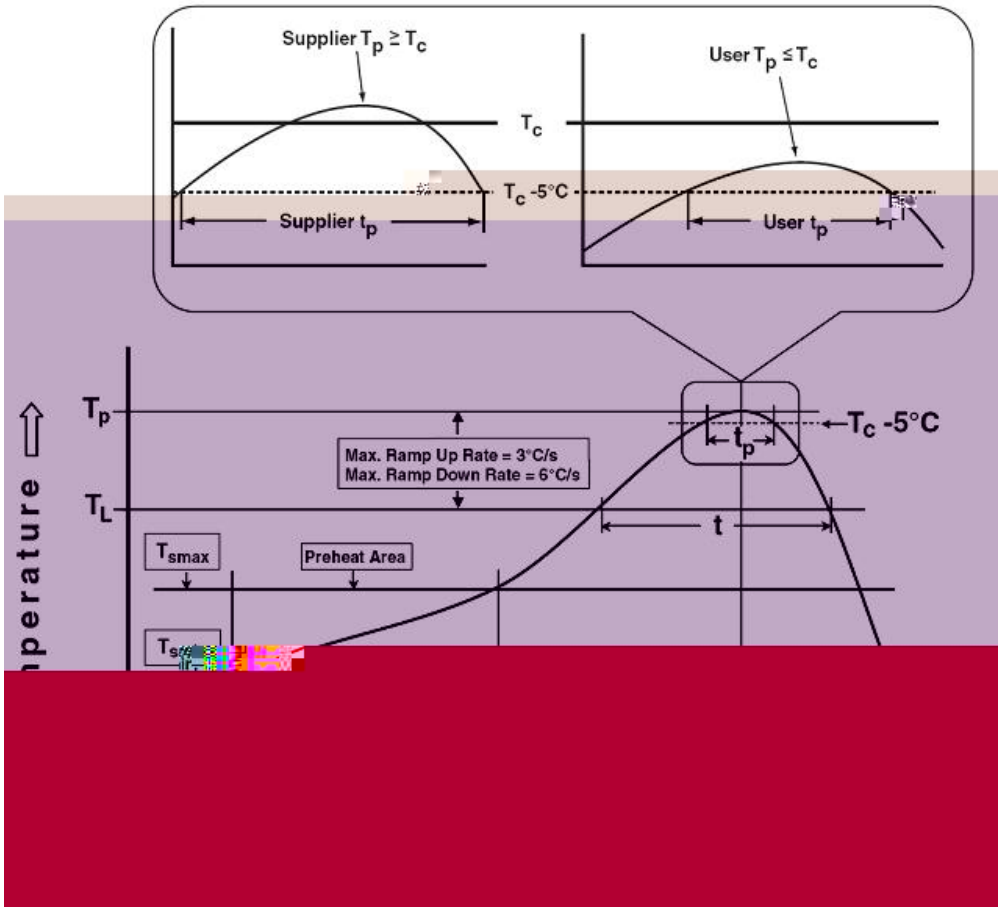
Supplier $T_p \geq T_c$
T_c
T_c -5°C
Supplier t_p
User $T_p \leq T_c$
User t_p
T_p
T_L
T_{smax}
Preheat Area
Max. Ramp Up Rate = 3°C/s
Max. Ramp Down Rate = 6°C/s
t_p
T_c -5°C
t